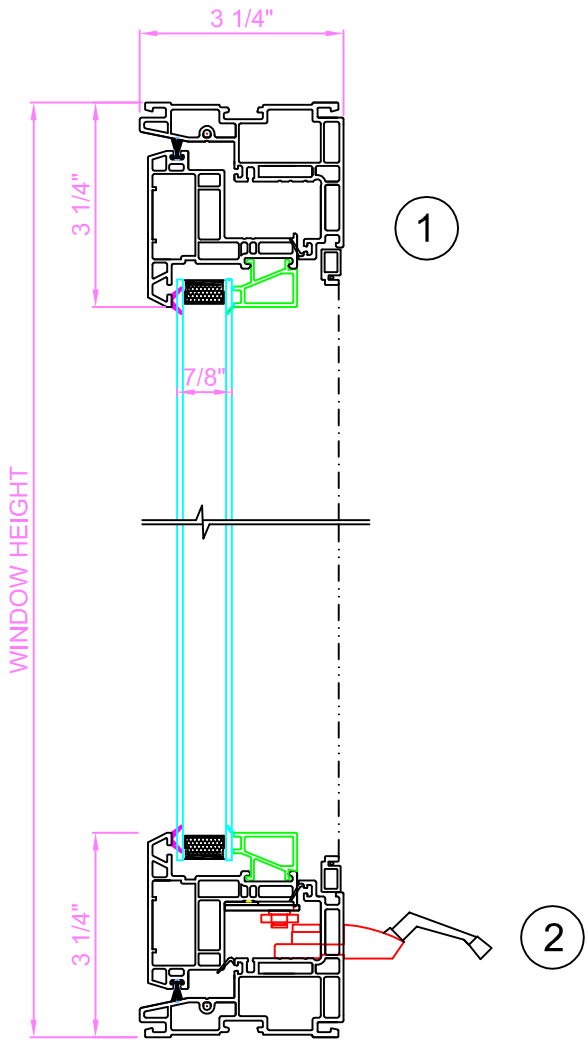

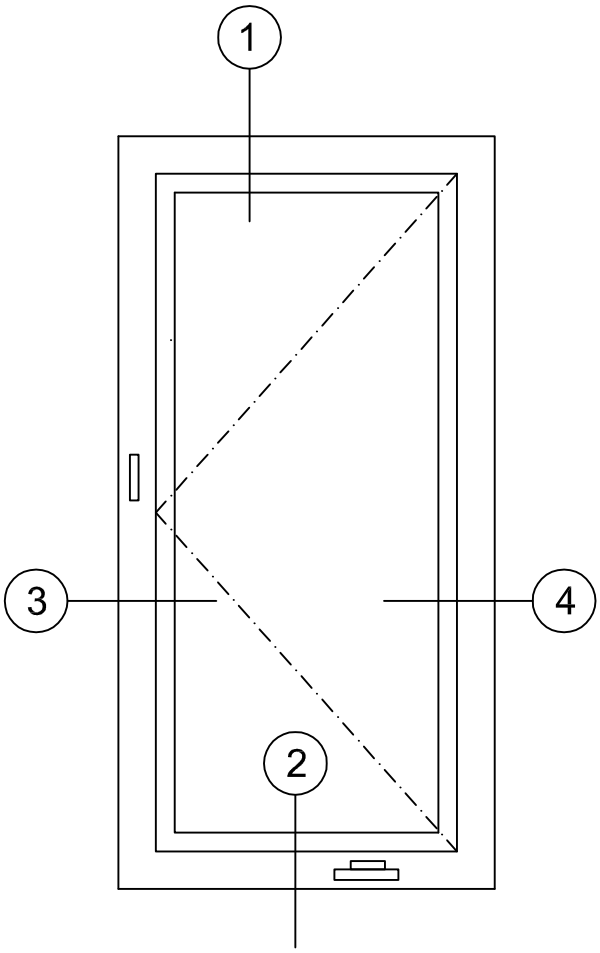

M4500 CASEMENT

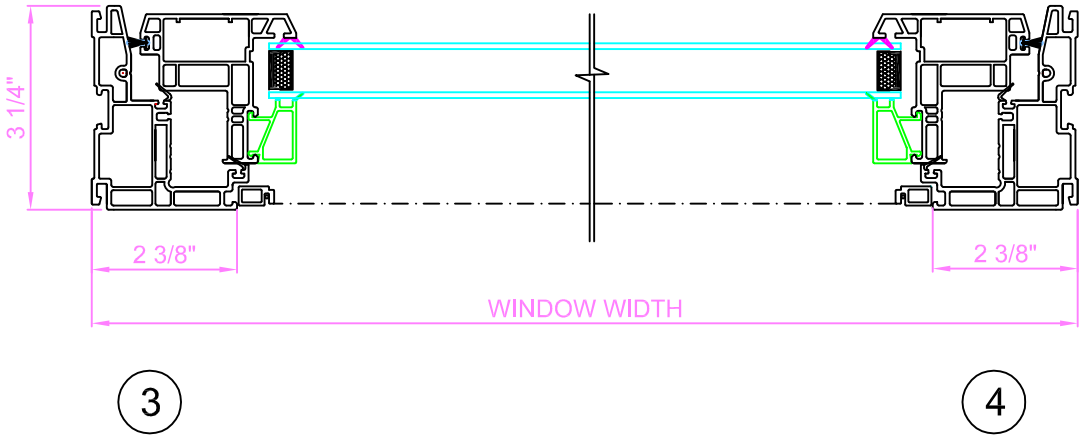

No.	REVISION	BY	DATE

MONDA WINDOW & DOOR SYSTEMS INC.

53-09 97th PLACE, CORONA, NY 11368
TEL: 718-760-0668 FAX: 718-760-0812

COPYRIGHT 2018
THIS DRAWING AND ITS CONTENTS ARE THE SOLE PROPERTY OF MONDA WINDOW & DOOR MFG. ANY UNAUTHORIZED USE OR REPRODUCTION IS STRICTLY PROHIBITED.

PRELIMINARY PART #:

TITLE: M4500 SERIES CASEMENT

DRAWN BY:	DESIGNED BY:	DATE	SCALE NTS
CHECKED BY:	APPROVED BY:	DRAWING No.	